Table of Contents

1	COVER PAGE
2	TABLES AND NOTES
3	BLOCK DIAGRAM
4	DRIVER SECTION
5	LED SECTION

Revisions

Rev	Description	Date	Approved
X1	First draft (development)	10-OCT-19	Giovanni Genna
A	Pilot production	29-NOV-19	Giovanni Genna
B	Release to production	01-FEB-21	Giovanni Genna

PCA9957HN-ARD

<Core Design>

Analog Sensor Product Group
6501 William Cannon Drive West
Austin, TX 78735-8598

This document contains information proprietary to NXP and shall not be used for engineering design, procurement or manufacture in whole or in part without the express written permission of NXP Semiconductors.

ICAP Classification: CP: ____ IUO: X PUBI: ____

Designer: Sandel Simion	Drawing Title: **PCA9957HN-ARD**		
Drawn by: Sandel Simion	Page Title: **COVER PAGE**		
Approved: Giovanni Genna	Size B	Document Number SCH-46841 PDF: SPF-46841	Rev B
	Date: Monday, February 01, 2021	Sheet 1 of 5	

Jumper table

REF DES	*JUMPER(DEFAULT)*	*JUMPER(OPTION1)*	*JUMPER(OPTION2)*	*PAGE NAME*
J2	1-2 = 5V FROM ARDUINO	2-3 = 5V FROM EXTERNAL		P04_DRIVER SECTION
J84	Imax - REMOTE	Imax - 30mA	Imax - 20mA	P04_DRIVER SECTION
J83	1-2 - D14	2-3 - EXTERNAL	OFF - NO LOAD	P05_LED SECTION
J82	1-2 - D15	2-3 - EXTERNAL	OFF - NO LOAD	P05_LED SECTION
J78	2-3 - D16 / BLUE	1-2 - EXTERNAL	OFF - NO LOAD	P05_LED SECTION
J77	2-3 - D16 / GREEN	1-2 - EXTERNAL	OFF - NO LOAD	P05_LED SECTION
J76	2-3 - D16 / RED	1-2 - EXTERNAL	OFF - NO LOAD	P05_LED SECTION
J81	2-3 - D17 / BLUE	1-2 - EXTERNAL	OFF - NO LOAD	P05_LED SECTION
J80	2-3 - D17 / GREEN	1-2 - EXTERNAL	OFF - NO LOAD	P05_LED SECTION
J79	2-3 - D17 / RED	1-2 - EXTERNAL	OFF - NO LOAD	P05_LED SECTION
J71	D10 - ON	D10 - OFF		P05_LED SECTION
J72	D11 - ON	D11 - OFF		P05_LED SECTION
J73	D12 - ON	D12 - OFF		P05_LED SECTION
J74	D13 - ON	D13 - OFF		P05_LED SECTION
J61	D18 / BLUE - ON	D18 / BLUE - OFF		P05_LED SECTION
J60	D18 / GREEN - ON	D18 / GREEN - OFF		P05_LED SECTION
J59	D18 / RED - ON	D18 / RED - OFF		P05_LED SECTION
J64	D19 / BLUE - ON	D19 / BLUE - OFF		P05_LED SECTION
J63	D19 / GREEN - ON	D19 / GREEN - OFF		P05_LED SECTION
J62	D19 / RED - ON	D19 / RED - OFF		P05_LED SECTION
J65	D4 - ON	D4 - OFF		P05_LED SECTION
J66	D5 - ON	D5 - OFF		P05_LED SECTION
J67	D6 - ON	D6 - OFF		P05_LED SECTION
J68	D7 - ON	D7 - OFF		P05_LED SECTION
J69	D8 - ON	D8 - OFF		P05_LED SECTION
J70	D9 - ON	D9 - OFF		P05_LED SECTION
J75,J49	OFF	ON - SHORT TEST		P05_LED SECTION
J58,J57	OFF	ON- SHORT TEST		P05_LED SECTION

<Core Design>

Classification: Public, Company Internal/Proprietary

Drawing Title:

PCA9957HN-ARD

Page Title:

TABLES AND NOTES

Size	Document Number	Rev
B	SCH-46841 PDF: SPF-46841	B

Date: Monday, February 01, 2021 Sheet 2 of 5

BLOCK DIAGRAM

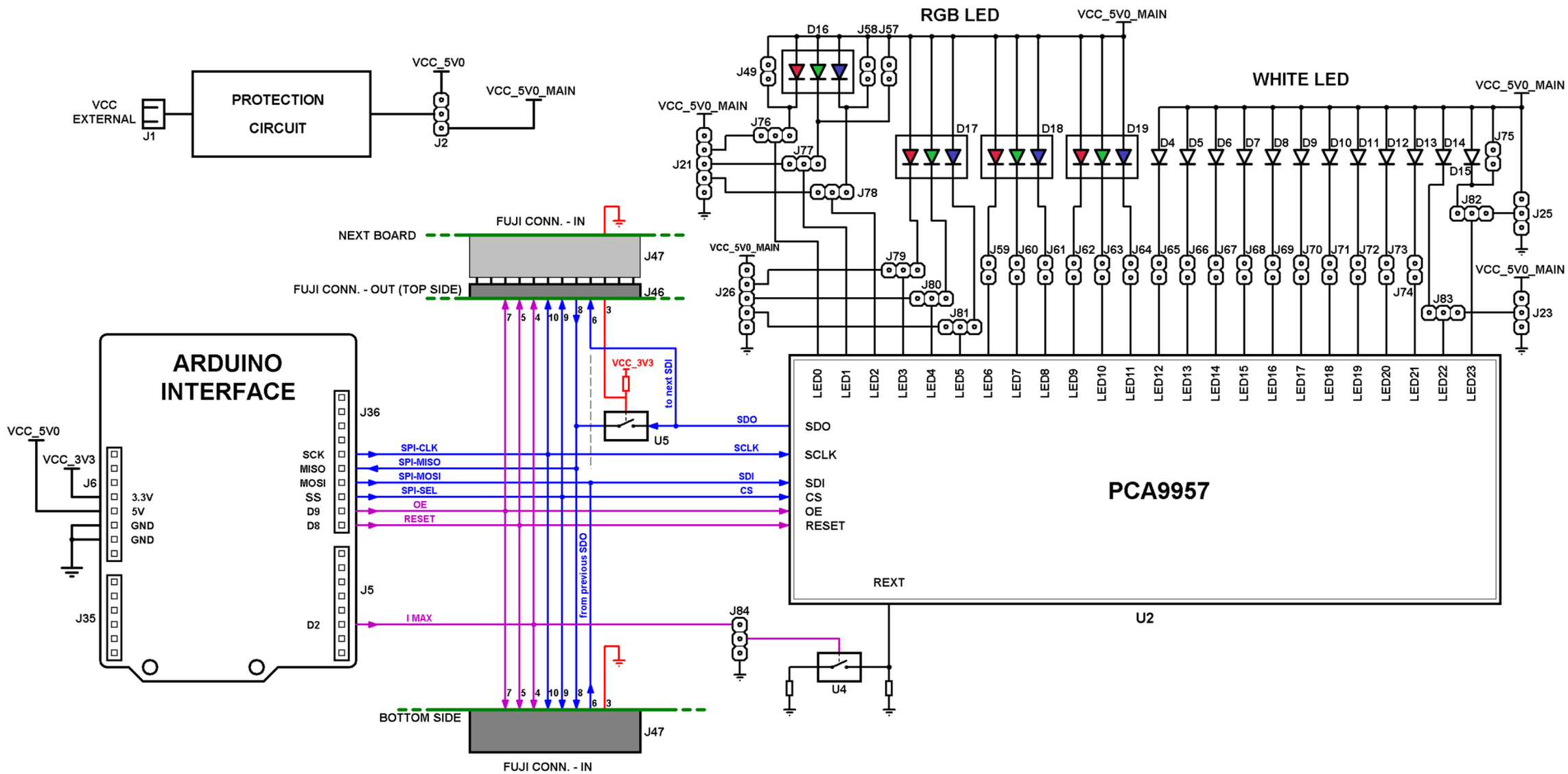

<Core Design>

Classification: Public, Company Internal/Proprietary

Drawing Title: **PCA9957HN-ARD**

Page Title: **BLOCK DIAGRAM**

Size	Document Number	Rev
C	SCH-46841 PDF: SPF-46841	B

Date: Monday, February 01, 2021 | Sheet 3 of 5

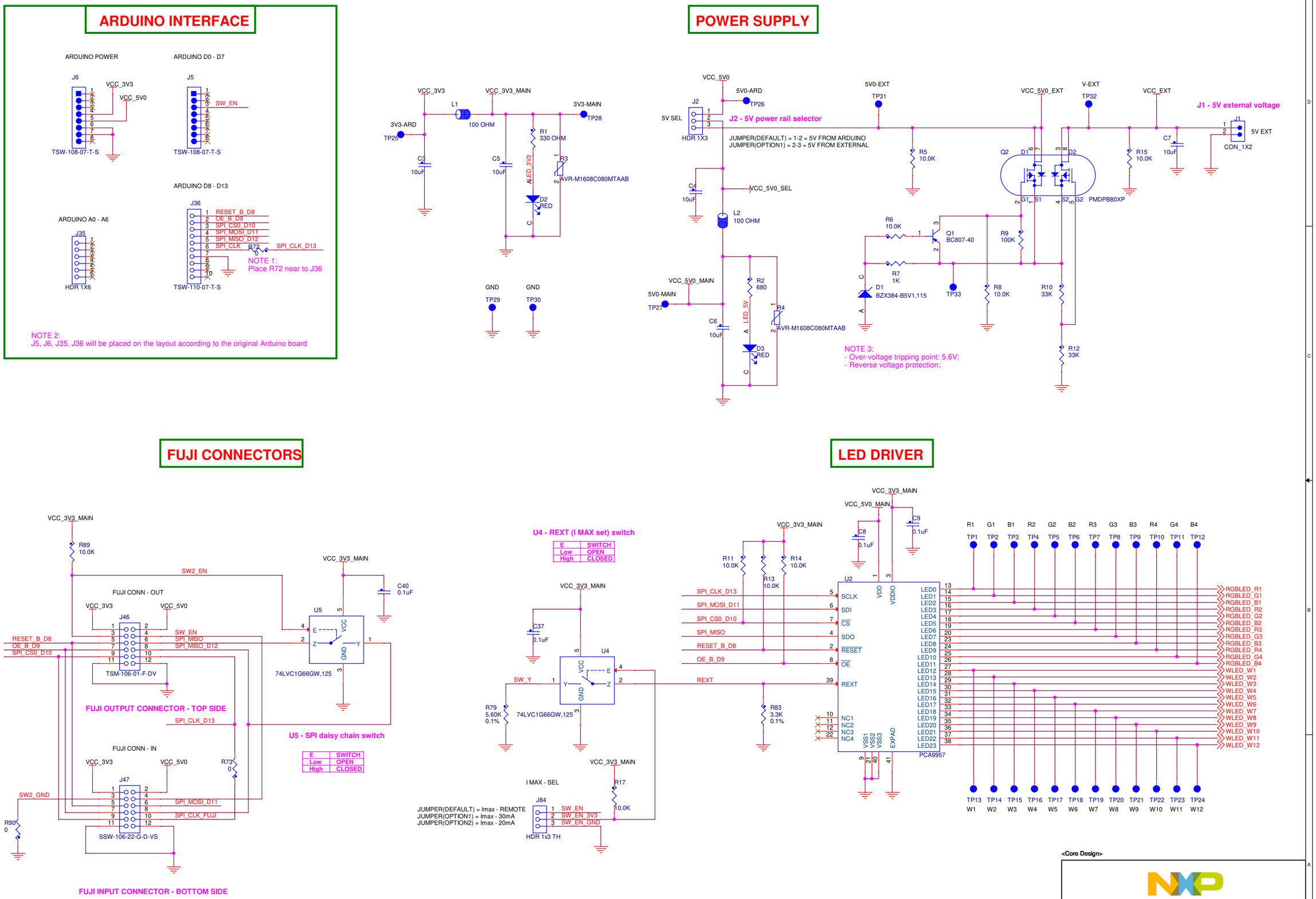

<Core Design>

Classification: Public, Company Internal/Proprietary

Drawing Title:

PCA9957HN-ARD

Page Title:

DRIVER SECTION

Size	Document Number	Rev
C	SCH-46841 PDF: SPF-46841	B

Date: Monday, February 01, 2021 Sheet 4 of 5

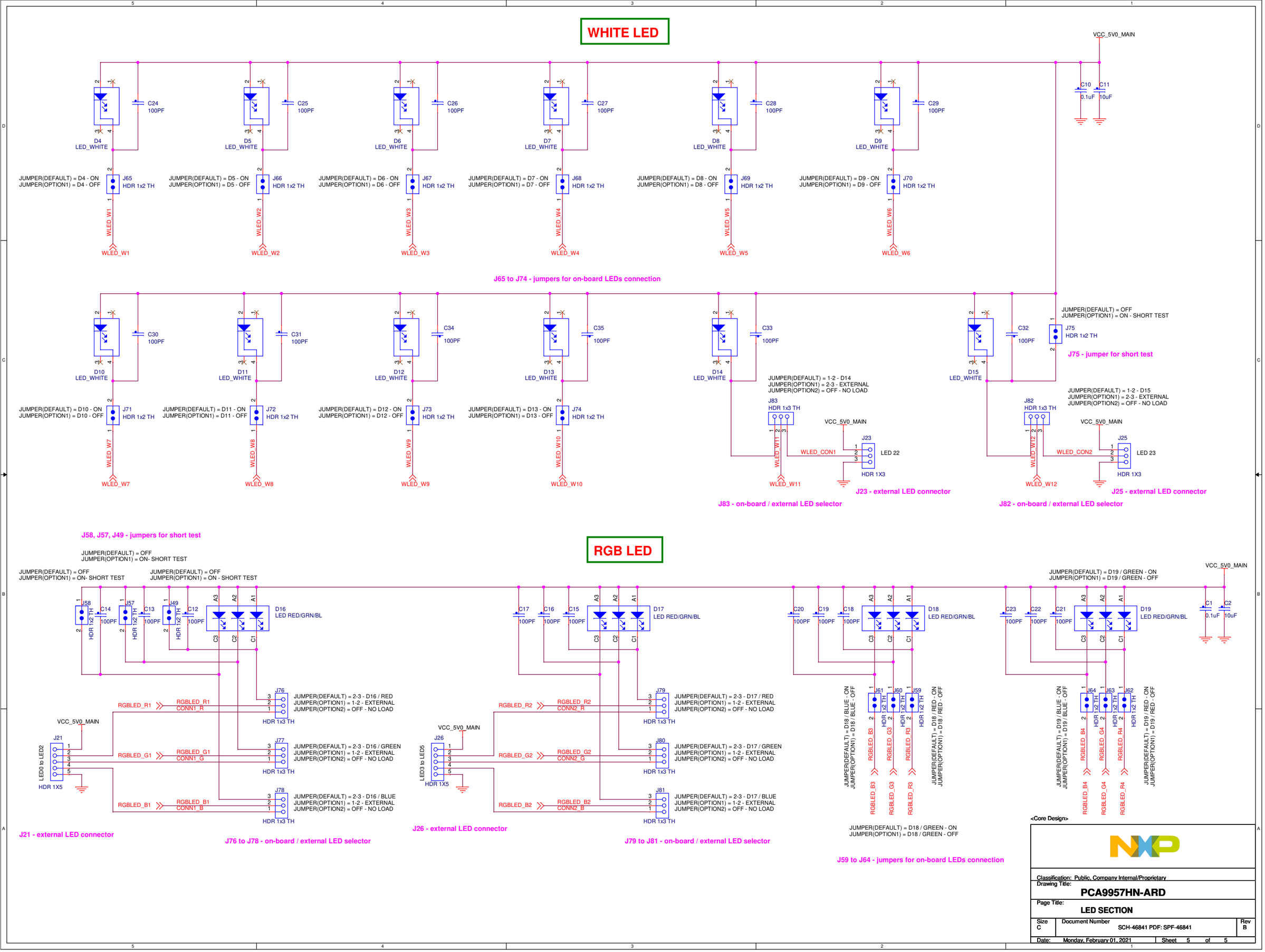
WHITE LED
VCC_5V0_MAIN
C10 0.1uF
C11 10uF
D4 LED_WHITE
C24 100PF
D5 LED_WHITE
C25 100PF
D6 LED_WHITE
C26 100PF
D7 LED_WHITE
C27 100PF
D8 LED_WHITE
C28 100PF
D9 LED_WHITE
C29 100PF
JUMPER(DEFAULT) = D4 - ON
JUMPER(OPTION1) = D4 - OFF
J65 HDR 1x2 TH
JUMPER(DEFAULT) = D5 - ON
JUMPER(OPTION1) = D5 - OFF
J66 HDR 1x2 TH
JUMPER(DEFAULT) = D6 - ON
JUMPER(OPTION1) = D6 - OFF
J67 HDR 1x2 TH
JUMPER(DEFAULT) = D7 - ON
JUMPER(OPTION1) = D7 - OFF
J68 HDR 1x2 TH
JUMPER(DEFAULT) = D8 - ON
JUMPER(OPTION1) = D8 - OFF
J69 HDR 1x2 TH
JUMPER(DEFAULT) = D9 - ON
JUMPER(OPTION1) = D9 - OFF
J70 HDR 1x2 TH
WLED_W1
WLED_W2
WLED_W3
WLED_W4
WLED_W5
WLED_W6
J65 to J74 - jumpers for on-board LEDs connection
D10 LED_WHITE
C30 100PF
D11 LED_WHITE
C31 100PF
D12 LED_WHITE
C34 100PF
D13 LED_WHITE
C35 100PF
D14 LED_WHITE
C33 100PF
D15 LED_WHITE
C32 100PF
JUMPER(DEFAULT) = OFF
JUMPER(OPTION1) = ON - SHORT TEST
J75 HDR 1x2 TH
J75 - jumper for short test
JUMPER(DEFAULT) = D10 - ON
JUMPER(OPTION1) = D10 - OFF
J71 HDR 1x2 TH
JUMPER(DEFAULT) = D11 - ON
JUMPER(OPTION1) = D11 - OFF
J72 HDR 1x2 TH
JUMPER(DEFAULT) = D12 - ON
JUMPER(OPTION1) = D12 - OFF
J73 HDR 1x2 TH
JUMPER(DEFAULT) = D13 - ON
JUMPER(OPTION1) = D13 - OFF
J74 HDR 1x2 TH
WLED_W7
WLED_W8
WLED_W9
WLED_W10
JUMPER(DEFAULT) = 1-2 - D14
JUMPER(OPTION1) = 2-3 - EXTERNAL
JUMPER(OPTION2) = OFF - NO LOAD
J83 HDR 1x3 TH
WLED_W11
WLED_CON1
J23 HDR 1X3
LED 22
J23 - external LED connector
J83 - on-board / external LED selector
JUMPER(DEFAULT) = 1-2 - D15
JUMPER(OPTION1) = 2-3 - EXTERNAL
JUMPER(OPTION2) = OFF - NO LOAD
J82 HDR 1x3 TH
WLED_W12
WLED_CON2
J25 HDR 1X3
LED 23
J25 - external LED connector
J82 - on-board / external LED selector
J58, J57, J49 - jumpers for short test
JUMPER(DEFAULT) = OFF
JUMPER(OPTION1) = ON- SHORT TEST
RGB LED
JUMPER(DEFAULT) = OFF
JUMPER(OPTION1) = ON- SHORT TEST
JUMPER(DEFAULT) = OFF
JUMPER(OPTION1) = ON - SHORT TEST
J58 HDR 1x2 TH
J57 HDR 1x2 TH
J49 HDR 1x2 TH
C14 100PF
C13 100PF
C12 100PF
D16 LED RED/GRN/BL
C17 100PF
C16 100PF
C15 100PF
D17 LED RED/GRN/BL
C20 100PF
C19 100PF
C18 100PF
D18 LED RED/GRN/BL
C23 100PF
C22 100PF
C21 100PF
D19 LED RED/GRN/BL
C1 0.1uF
C2 10uF
JUMPER(DEFAULT) = D19 / GREEN - ON
JUMPER(OPTION1) = D19 / GREEN - OFF
RGBLED_R1
CONN1_R
J76
JUMPER(DEFAULT) = 2-3 - D16 / RED
JUMPER(OPTION1) = 1-2 - EXTERNAL
JUMPER(OPTION2) = OFF - NO LOAD
HDR 1x3 TH
VCC_5V0_MAIN
J21
LED0 to LED2
HDR 1X5
RGBLED_G1
CONN1_G
J77
JUMPER(DEFAULT) = 2-3 - D16 / GREEN
JUMPER(OPTION1) = 1-2 - EXTERNAL
JUMPER(OPTION2) = OFF - NO LOAD
HDR 1x3 TH
RGBLED_B1
CONN1_B
J78
JUMPER(DEFAULT) = 2-3 - D16 / BLUE
JUMPER(OPTION1) = 1-2 - EXTERNAL
JUMPER(OPTION2) = OFF - NO LOAD
HDR 1x3 TH
J21 - external LED connector
J76 to J78 - on-board / external LED selector
RGBLED_R2
CONN2_R
J79
JUMPER(DEFAULT) = 2-3 - D17 / RED
JUMPER(OPTION1) = 1-2 - EXTERNAL
JUMPER(OPTION2) = OFF - NO LOAD
HDR 1x3 TH
VCC_5V0_MAIN
J26
LED3 to LED5
HDR 1X5
RGBLED_G2
CONN2_G
J80
JUMPER(DEFAULT) = 2-3 - D17 / GREEN
JUMPER(OPTION1) = 1-2 - EXTERNAL
JUMPER(OPTION2) = OFF - NO LOAD
HDR 1x3 TH
RGBLED_B2
CONN2_B
J81
JUMPER(DEFAULT) = 2-3 - D17 / BLUE
JUMPER(OPTION1) = 1-2 - EXTERNAL
JUMPER(OPTION2) = OFF - NO LOAD
HDR 1x3 TH
J26 - external LED connector
J79 to J81 - on-board / external LED selector
J61 HDR 1x2 TH
J60 HDR 1x2 TH
J59 HDR 1x2 TH
JUMPER(DEFAULT) = D18 / BLUE - ON
JUMPER(OPTION1) = D18 / BLUE - OFF
RGBLED_B3
RGBLED_G3
RGBLED_R3
JUMPER(DEFAULT) = D18 / RED - ON
JUMPER(OPTION1) = D18 / RED - OFF
JUMPER(DEFAULT) = D18 / GREEN - ON
JUMPER(OPTION1) = D18 / GREEN - OFF
J59 to J64 - jumpers for on-board LEDs connection
J64 HDR 1x2 TH
J63 HDR 1x2 TH
J62 HDR 1x2 TH
JUMPER(DEFAULT) = D19 / BLUE - ON
JUMPER(OPTION1) = D19 / BLUE - OFF
RGBLED_B4
RGBLED_G4
RGBLED_R4
JUMPER(DEFAULT) = D19 / RED - ON
JUMPER(OPTION1) = D19 / RED - OFF
<Core Design>
Classification: Public, Company Internal/Proprietary
Drawing Title:
PCA9957HN-ARD
Page Title:
LED SECTION
Size C
Document Number
SCH-46841 PDF: SPF-46841
Rev B
Date: Monday, February 01, 2021
Sheet 5 of 5